32 OUNCE STOCK BOTTLES

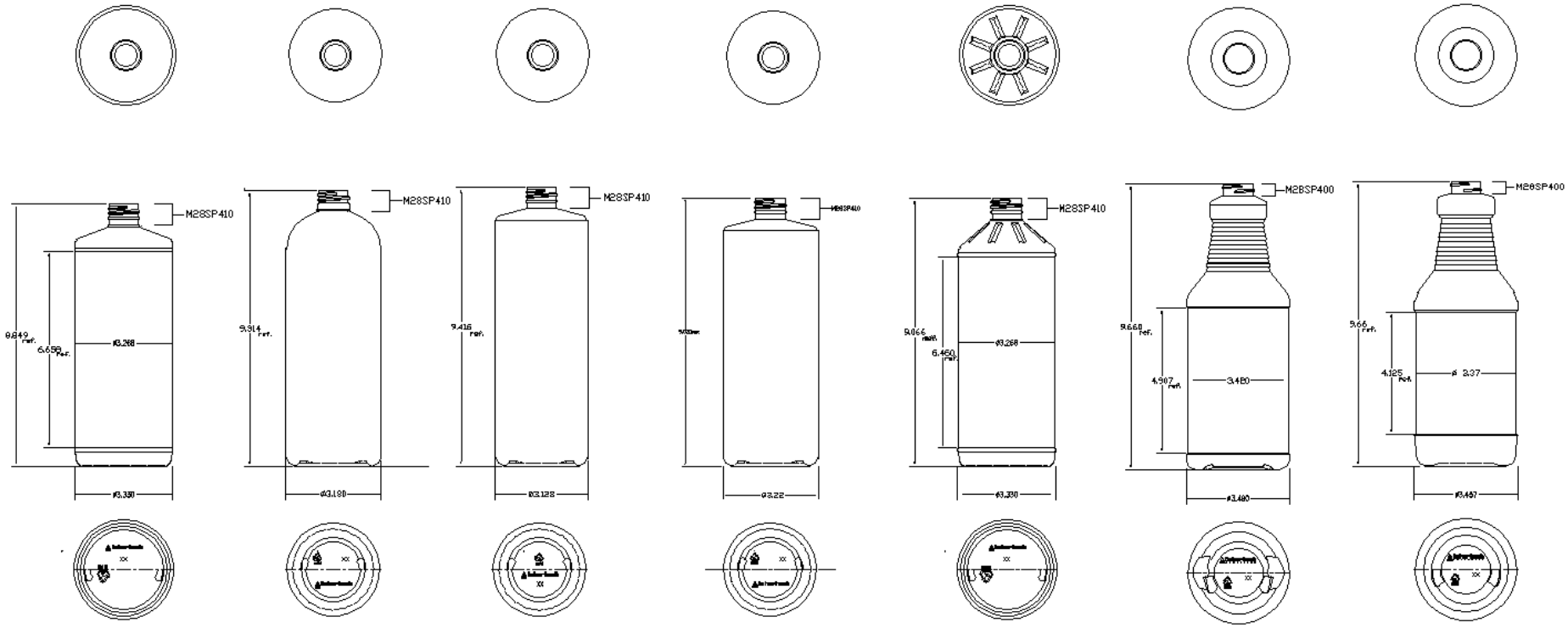

PART NO.:	K-11	F-33	D-11	R-11	K-13	R-18	K-18
STYLE:	RING CYLINDER	BOSTON ROUND	EXT. TALL CYLINDER	STRAIGHT WALL	FLUTED RING CYLINDER	LONG PANEL CARAFE	SHORT PANEL CARAFE
MATERIAL:	HDPE	HDPE	HDPE	HDPE	HDPE	HDPE	HDPE
NECK FINISHES:	28/400-410	28/410	28/410	28/410-63/400	28/400-410	28/400	28/400
STOCK COLORS:	NATURAL/BLUE WHITE/ WHITE	NATURAL/ WHITE	NATURAL/ WHITE	NATURAL/BLUE- WHITE/WHITE	NATURAL/BLUE- WHITE/WHITE	NATURAL/BLUE- WHITE/WHITE	NATURAL/BLUE- WHITE
GRAM WEIGHT:	50-52	50-55	50-55	50-55	52-55	48-55	48-50
CAPACITY:	32 fl oz. 946.3 ml	32 fl oz. 946.3 ml	32 fl oz. 946.3 ml	32 fl oz. 946.3 ml	32 fl oz. 946.3 ml	32 fl oz. 946.3 ml	32 fl oz. 946.3 ml